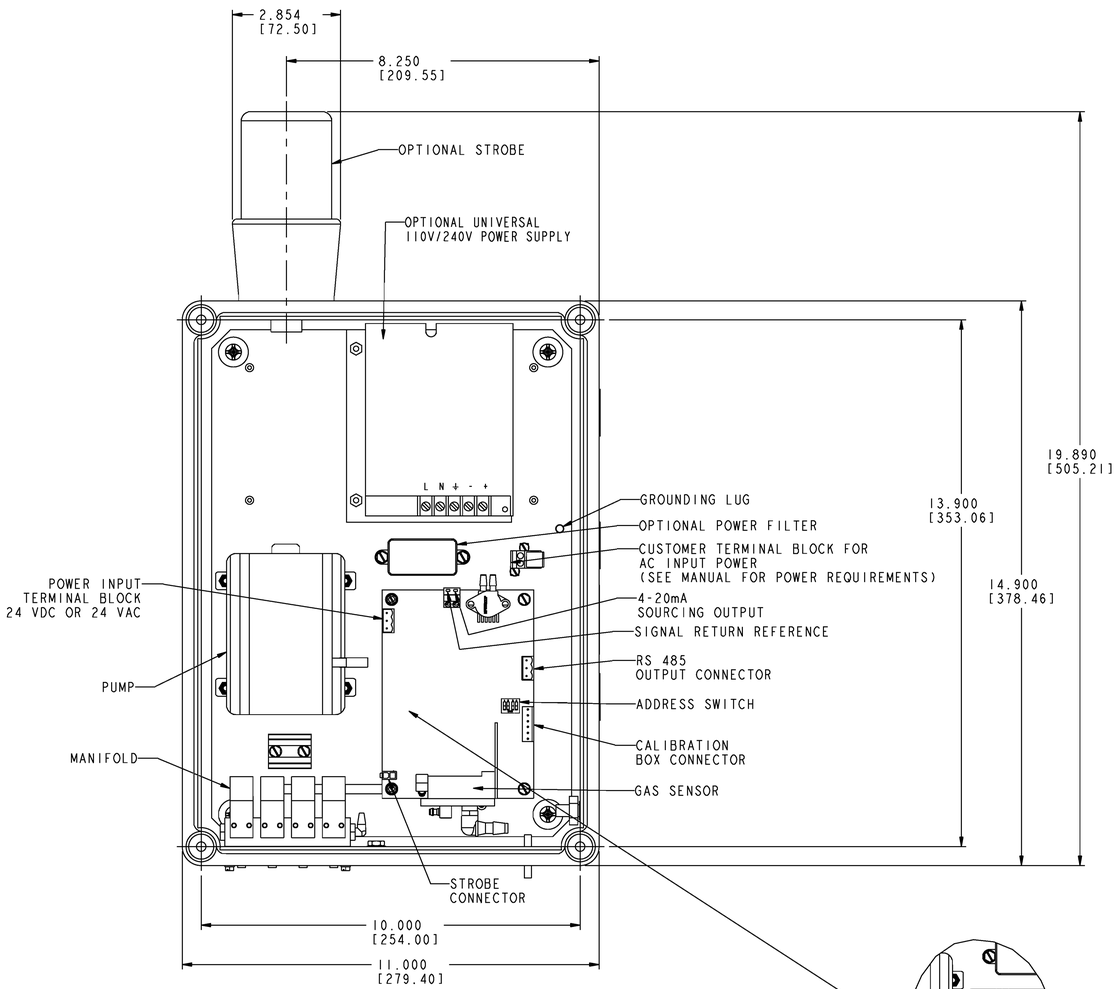

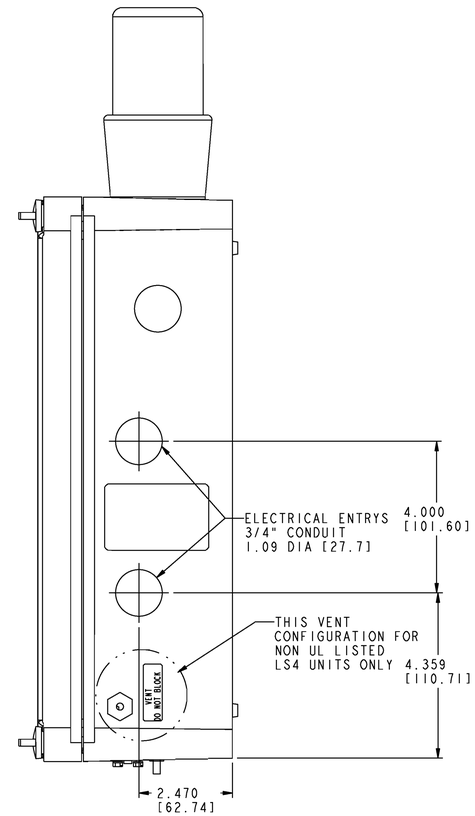

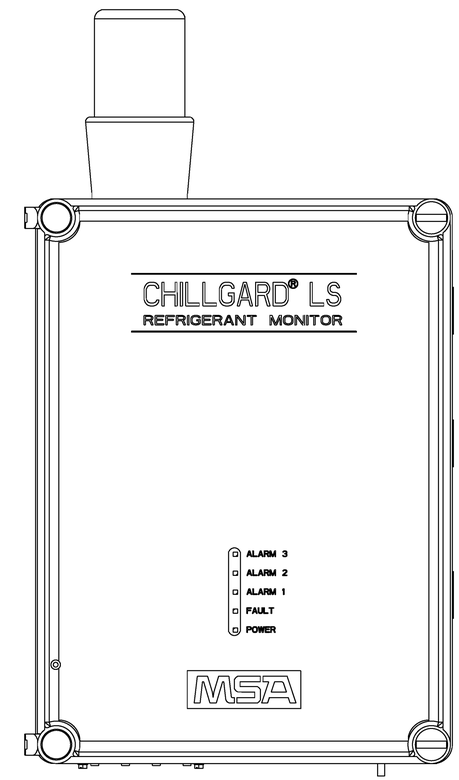

SAMPLE TUBING:
MSA PART NO.:600771, 1/8" I/D/ X 300 FT. LONG MAX.
END OF LINE FILTER:
MSA PART NO.: 711561
MSA PART NO.: 711562 (AMMONIA)

4-20 mA SIGNAL OUTPUT WIRING:
---UNDER LINE POWER---
22 AWG 9000 FEET 250 OHM MAX LOAD.
22 AWG 2500 FEET 500 OHM MAX LOAD.

NOTES:
1. AC POWER SUPPLY ACCEPTS 110 VAC MINIMUM TO TO 240 VAC MAXIMUM. DC SUPPLY 24V +0/-20%.
2. SEPARATE AC AND DC WIRING DURING INSTALLATION.
(1) 3. ENCLOSURE MATERIAL ABS WITH EPDM GASKET.
4. ALL DIMENSIONS IN INCHES AND [MILLIMETERS].
5. DO NOT DRILL ANY HOLES INTO THE REAR OF THE ENCLOSURE.
6. WEIGHT: 9.5 LBS (4.27 Kg)
7. FOR MORE INFORMATION REFER TO THE MANUAL.

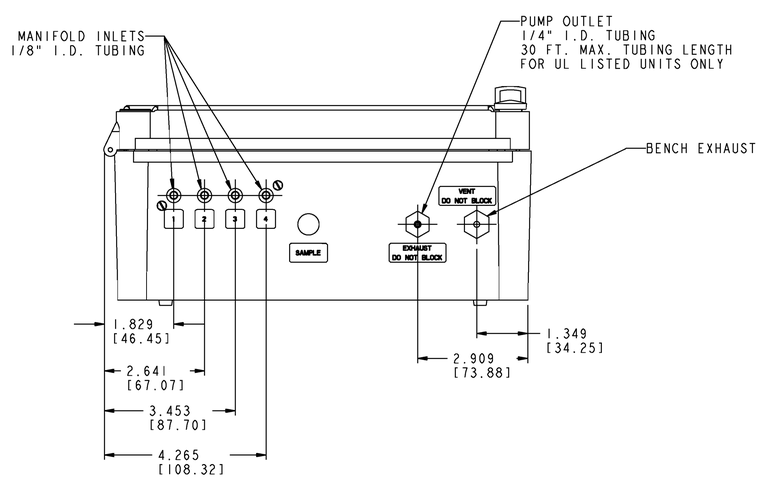

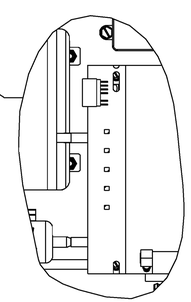

DETAIL OF LED BOARD
(NOT SHOWN IN MAIN VIEW)

CUSTOMER _____
P.O. # _____
LOCATION _____
TAG # _____

REVISIONS

APR 19 2002
(1) 6-3-02
REVISED NOTE 3 REMOVED
"NEMA 4X (IP66)"
ECO-500000148906
WJE WLB

JUN 04 2002
(2) 11-19-02
REVISED LOCATION FOR
VENTS
ECO-500000151194
WJE WLB

DEC 17 2002

AUTHORIZED COUNTRY	MSA — MINE SAFETY APPLIANCES CO. PITTSBURGH, PA 15230, USA	THIS DRAWING IS THE PROPERTY OF MSA AND IS MADE AVAILABLE TO YOU IN CONFIDENCE AND SUBJECT TO THE FOLLOWING: NO PERMISSION IS GRANTED TO PUBLISH, USE, REPRODUCE, TRANSMIT OR DISCLOSE THIS DRAWING, OR ANY INFORMATION CONTAINED THEREIN TO OTHERS WITHOUT THE PRIOR WRITTEN CONSENT OF MSA EXCEPT FOR THE MANUFACTURE OF ARTICLES FOR MSA. SCHUTZVERMERK NACH DIN 34 BEACHTEN. MSA AUER GmbH.	DO NOT SCALE DWG.
	MSA STANDARD SHOP PRACTICES APPLY		
	CODE SYMBOLS: CRITICAL (A), MAJOR A (A), MAJOR B (A), 100 % INSPECTION (A), MINOR (NO MARK)	JOB NO. 30003220 PH0705	APPROVAL AGENCY CODE: NO — NIOSH ATTR. DOC.: .
	TOLERANCES UNLESS OTHERWISE SPECIFIED: FRACTIONAL ± 1/64 in.; 2 PL DEC. ± 0.01 in.; 3 PL DEC. ± 0.005 in.; ANGULAR ± 1 deg.	DRAWN BY WJE DATE 3-13-02	INSTALLATION OUTLINE, CHILLGARD LS-4
	SEE MSA STANDARD SHOP PRACTICES FOR DRILLED HOLE TOLERANCES	CHECKED BY W.BARBISH 4-11-02	
		PROJ. ENGR. W.BARBISH 4-11-02	
		QUALITY ASSURANCE J.DANNHARDT 4-15-02	
		MANUFACTURING R.SMIDL 4-11-02	CADD REF: 10000013567 — SCALE: 0.500
	D SK	DOCUMENT NO. 10000013567	SHEET 1 OF 1